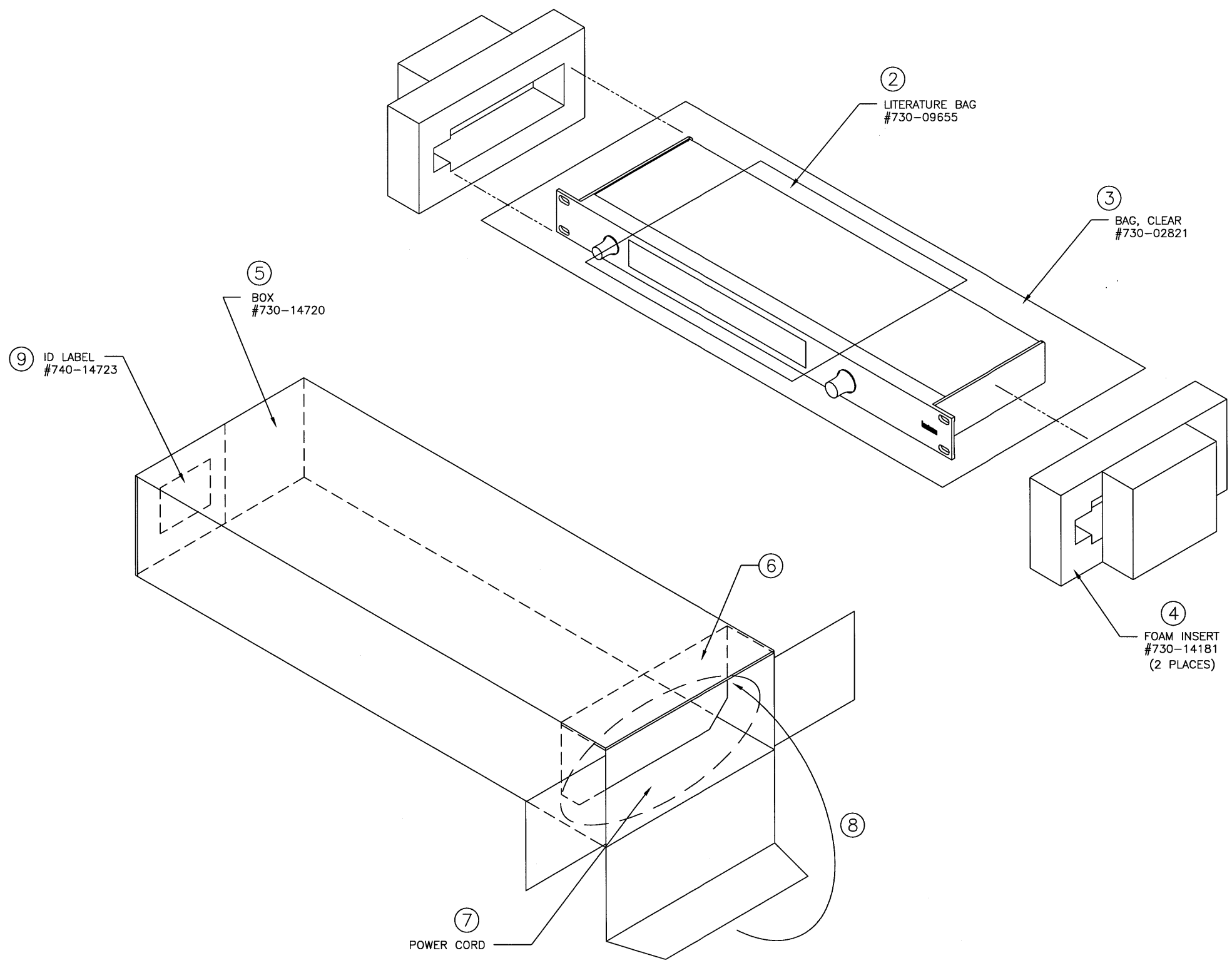

REVISIONS			
REV.	DESCRIPTION	DWR/CHKD	Q.C./AUTH

NOTES

1. PART NUMBER LISTING IS FOR REFERENCE ONLY AND DOES NOT SUPERSEDE THE BILL OF MATERIAL #022-14708.
2. PUT CD & LITERATURE IN BAG. REFER TO BOM FOR LIST AND SEQUENCE OF LATEST DOCUMENTATION PACKAGE. FOLD & TAPE BAG.
3. PUT UNIT (WITH LITERATURE BAG ON TOP) IN BAG, FOLD AND SEAL BAG SO ALL CREASES AND SECURING TAPE ARE ON THE BOTTOM OF THE UNIT.
4. PLACE FOAM INSERTS ON ENDS OF SEALED UNIT AS SHOWN.
5. FOLD UP END OF BOX WITH STRAIGHT RECTANGULAR FLAPS. TAPE WITH CLEAR TAPE.
6. SLIDE UNIT INTO BOX. FOLD DOUBLE SCORED FLAP INTO BOX AGAINST THE FOAM INSERT.
7. PLACE APPROPRIATE POWER CORD IN THE END CAVITY. SEE BOM FOR PART NUMBER.
8. FOLD IN SMALL SIDE FLAPS AND CLOSE END FLAP. TAPE WITH CLEAR TAPE.
9. PLACE ID LABEL ON END FLAP IN SPACE PROVIDED.

NEXT ASSY	MPX200
	USED ON
APPLICATION	

UNLESS OTHERWISE SPECIFIED DIMENSIONS ARE IN INCHES
TOLERANCES ARE:
FRACTIONS DECIMALS ANGLES
.XX +/-.010
.XXX +/-.005

MATERIAL

FINISH

DO NOT SCALE DRAWING

ACAD 2000 FILE NAME
14719-0

APPROVALS		DATE
DRAWN	AN	12/3/00
CHECKED	WH RL	1/18/01 1/19/01
Q.C.	CW	1/22/01
ISSUED	JLM	1/22/01

lexicon

TITLE
ASSY DWG,
SHIPMENT, MPX200

SIZE	FSCM NO.	DWG. NO.	REV.
B		080-14719	0

SCALE N/A

SHEET 1 OF 1

LEXICON, INC.